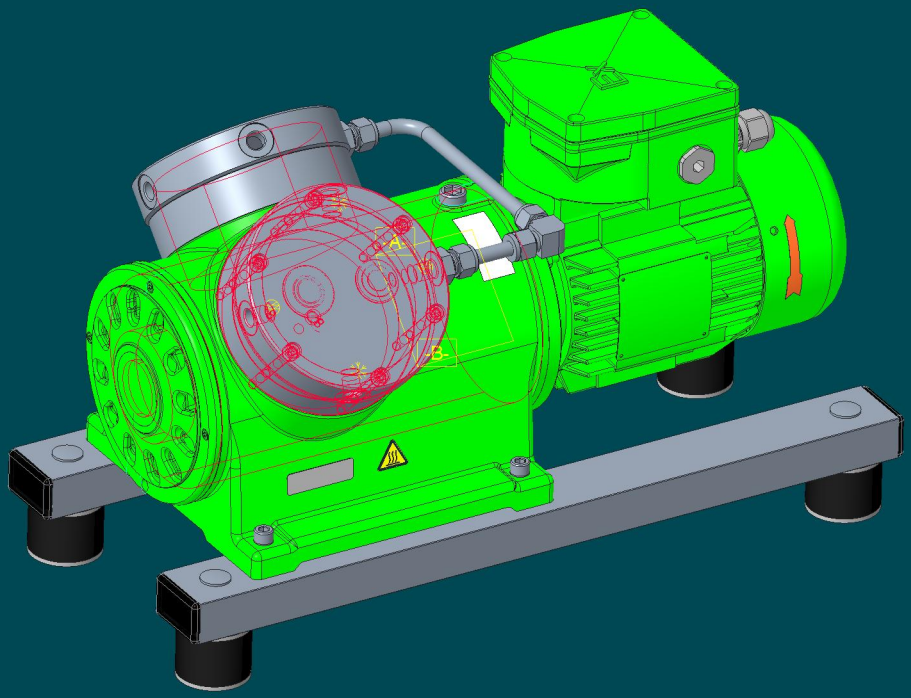
A
B