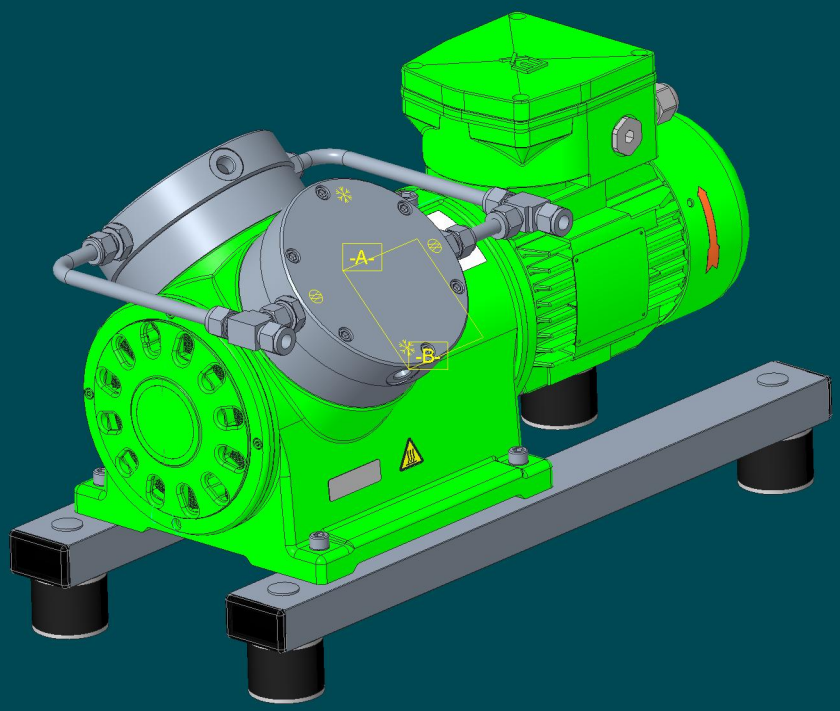
-A-
-B-